Intelligent Edge Platform

Solution Brief

Table of Contents

Challenges at the Edge:

With an estimated 80 ZB of data generation at the Edge in 2021 and longer term projections of one trillion nodes to be deployed at the Edge by 2035, enterprise-wide digital transformation efforts to gain meaningful predictive insights, using AI/ML modeling are confronted with the challenges of:

- Managing large heterogeneous datasets
- Orchestration of infrastructure spread across geographically dispersed Edge locations
- Provisioning of secure and scalable networking
- Limitations of the current compute infrastructure to process data
- Skillsets, capital and time needed to build high performance computing (HPC) orchestration to power AI platforms
- Identifying and curating AI algorithms

Intelligent Edge Platform:

Zeblok Computational and NodeWeaver are partnering to offer an "Intelligent Edge" Platform, which integrates NodeWeaver's Edge infrastructure orchestration, and Zeblok's turnkey AI Platform-as-a-Service, a comprehensive enterprise solution for AI/ML model development, training and deployment at the Edge.

Enterprises can now benefit from the following features

- Autonomously provisioned edge infrastructure
- Secure networking, with zero trust at Edge locations
- Turnkey high-performance computing (HPC) orchestration for AI model development
- Marketplace for curated AI algorithms

This solution enables data scientists to be productive and IT operations to be scalable and efficient, saving time and money.

Benefits

- **Agility:** The solution simplifies deployment of highly resilient, agile and scalable compute clusters capable of running multiple virtual machines and container-based workloads, optimized for running workloads at the edge fully autonomously, integrating self-management, self-optimizing and self-healing. IT operations managers will be able to efficiently orchestrate infrastructure and build reliable and secure networking at the edge for single or thousands of edge locations spanned across continents.

- **Large Dataset Capable:** Data engineers and data scientists can ingest large volumes of data in accelerated AI Data Lake and use CUDA optimized Jupyter Notebooks to train their AI models on GPU-based infrastructure at the Edge.

- **Savings:** Enterprises will save iteration time during AI model training cycles and will save millions of dollars by eliminating the need to transport large volumes of data to the core data center. Data scientists will be more productive and efficient and will dramatically reduce the time required for AI model development and deployment.

NodeWeaver + Zeblok AI stack

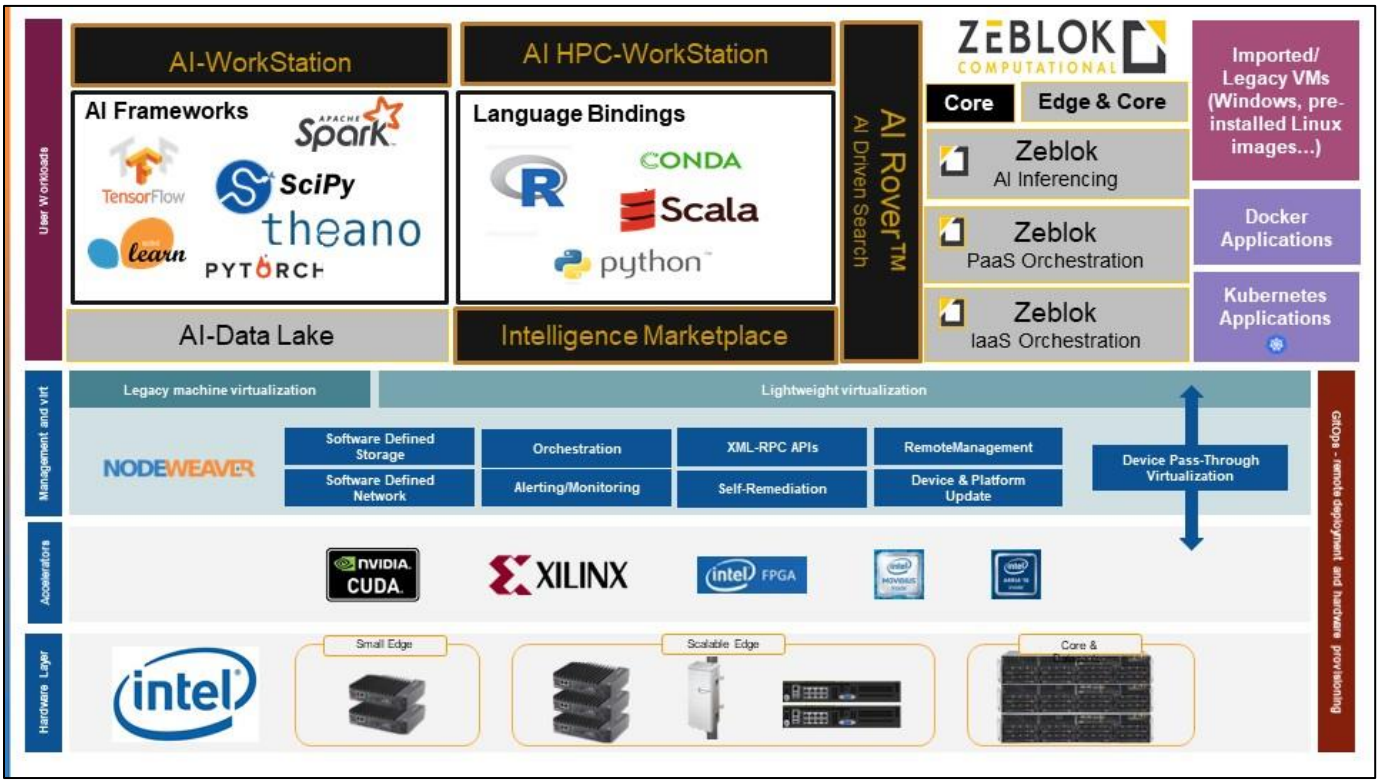

NodeWeaver Nano Cloud:

NodeWeaver is a software-defined operating platform that enables the deployment of highly resilient, agile and scalable compute clusters capable of running multiple virtual machines and container-based workloads, optimized for running workloads at the edge fully autonomously, integrating self-management, self-optimizing, self-healing features that dramatically reduces cost of ownership. NodeWeaver integrates orchestration, software-defined storage, software-defined networking, multiple hypervisors all managed by the intelligent autonomous system.

- **Hardware Vendor Agnostic:** Intelligent-Edge-AI platform, is a complete edge AI platform, providing a reliable, flexible, scalable and secure solution for infrastructure management and AI/ML model development and deployment at the Edge, obviating hardware vendor lock-in.

  The platform fully supports heterogeneous clusters, even across different CPU/GPU generations and families. It is an extensible architecture that is autonomous at any scale, designed to run anywhere, non-stop and continually self-optimized, with no human interaction required. This modular approach allows hardware to be phased-in incrementally and enables customers to achieve operational and supply chain flexibility and cost savings.

- **Low-Touch Fleet Installation:** Any technician can perform initial site configuration and startup – no IT skills are required. Connect a server to the network and power on to start the self-configuration process automatically pulling configurations from a Git repository.

- **Lightweight:** Specifically developed for smaller environments, the Intelligent-Edge-AI platform achieves feature and function parity with data center-grade HPC infrastructure solutions in a much smaller compute footprint.

- **Reliability and Scalability:** The platform delivers highly available server clusters, allowing servers to be clustered together over a switch to form “nano-clouds”. NodeWeaver automatically load-balances applications across all servers in the cluster, where all storage is automatically replicated to different systems in the cluster, and virtual machines automatically restart in the event of a server outage.

- **Maintenance Simplicity:** The platform automatically detects, adds and load-levels new components (hard drives, network connections) and systems. Clusters can be seamlessly composed of different servers – even different chip families – to support optimal expansion and non-disruptive hardware refreshes. There is no need to stock identical systems for spares. Simply replace failed systems with the latest available hardware. Automatic, non-disruptive firmware updates ensure secure non-stop operation, without the need to involve the system administrator.

- **Management Flexibility:** Most infrastructure management tasks are fully autonomous. Choice of management interfaces: local or remote web-based GUI, or programmatic via the API.

- **Marketplace – public & private:** Any software applications can be placed in the public and one or more private NodeWeaver marketplaces. Marketplaces serve primarily as a distribution platform for software partners.

- **3rd Party Monitoring/Management tools:** Customers who need to manage a large fleet of deployments already have their own monitoring framework in place. NodeWeaver has a full API that allows them to monitor (and manage) their edge systems using their existing monitoring framework.

Zeblok AI Platform Features:

The AI platform is an enterprise-ready turnkey AI Platform-as-a-Service (AI PaaS) that enables data scientists to develop, customize and deploy AI projects quickly and efficiently, generate new insights and enhance decision-making capabilities.

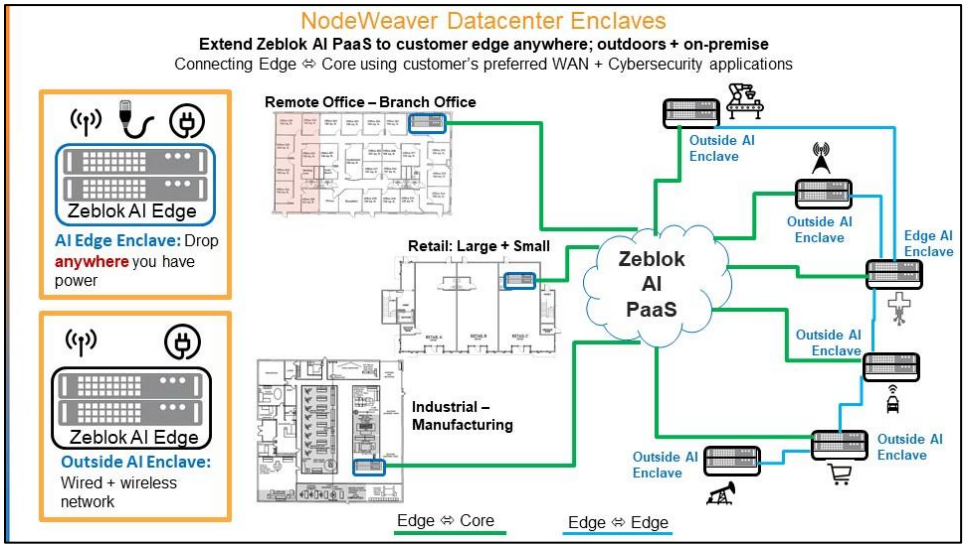

The Zeblok platform has been built ground up to provide the simplest end to end user experience including collaboration across teams. Its discrete composable foundational components make it easy to deploy and satisfy a multitude of challenges that enterprises face.

- **AI & HPC WorkStation**: The AI-WorkStation provides a single unified environment, which seamlessly orchestrates infrastructure, open source AI/ML frameworks and proven original AI algorithms. An intuitive and simple user interface enables a data scientist, data engineer, or AI engineer to access computing power, efficiently develop, train and take AI models to production in a runtime environment on the same platform, with consummate ease.

  The AI-WorkStation builds upon and virtualizes the ubiquitous Jupyter Notebook technology, integrating a powerful multi-class orchestration and scheduling layer to support a variety of workloads, scaling seamlessly, from a single to hundreds of GPUs. Under the hood, our container-based orchestration engine supports both standard workloads (non-computationally intensive workloads requiring CPUs) for AI model development, as well as HPC (computationally intensive workloads requiring multiple GPUs).

  The AI-WorkStation provides enormous freedom to run enterprise workloads in multiple data centers, based on cost profile and tailored to application requirements. This flexibility to drive workloads is capital efficient. A user can select low latency compute resources from business partners' data centers or from (albeit higher priced) public clouds like AWS, GCP and Azure.

  Data scientists don't have to waste time optimizing frameworks on GPU platforms. CUDA optimization for popular AI frameworks is available out of the box and ready to go with the click of a button. All popular data science language bindings, such as R, Scala, and Python are supported.

- **AI Data Lake:** Managing and processing data on conventional servers can be an arduous task. Zeblok's AI Data Lake is a high-performance object storage, with built-in intelligence that allows you to import, filter, and instantly analyze objects. Our solution is designed for performance, scales up with your data, and can provide industry-grade SSL security and data-redundancy for high availability of data at SSD speeds. Accelerates search by 10-15x.

  Easily automate your imports, with large files using various methods such as the Data Browser Portal, magic commands, inbuilt S3 REST API, Data Lake Desktop App, and HTTP source. Whether you are ingesting Image, video data files coming from IOT sensors at Edge locations through 4G/5G low latency network or uploading large csv files, AI Data Lake has you covered, with unprecedented data acceptance, performance and compatibility.

- **Zeblok Intelligent Marketplace:** Growing library of curated AI algorithms that are not just black boxes, curated via closed loop validation, allowing advanced analysis. The algorithms are not just carefully selected and rigorously tested but are also easy to use and share. Users can select from Explainable AI and other cognitive AI algorithms in NLP, computer vision, high entropy quantum randomness, reinforcement learning and others.

NodeWeaver S.r.l.
Via Roveredo, 20/B, 33170
Pordenone (PN), Italy

901 NW 35th Street, Boca Raton, FL 33431
Phone: +1 855-482-2711
https://www.nodeweaver.eu/

Zeblok Computational Inc.
1500 Stony Brook Road,
Stony Brook, NY 11794
www.computational.zeblok.com
Phone: +1 631-223-8233